[illegible]

[illegible] 10 [illegible] 15mm [illegible] 15mm [illegible]

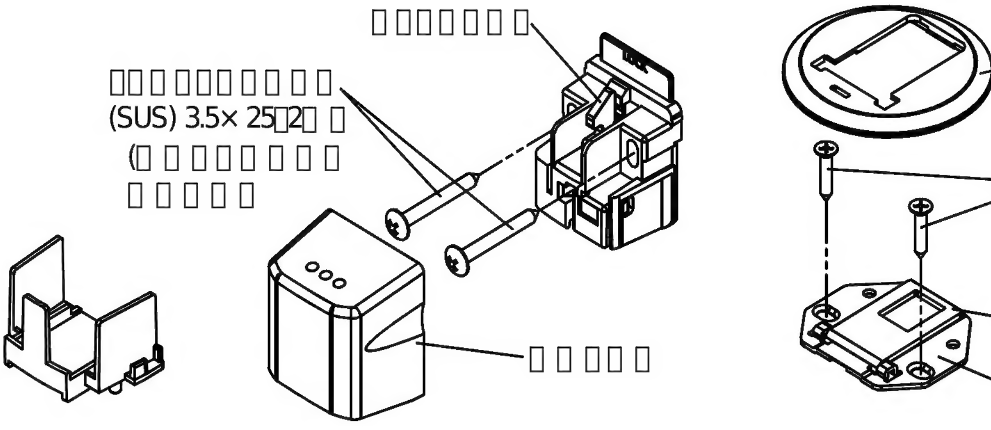

[illegible]

※ [illegible]

1 [illegible]

① [illegible] 2 [illegible]

② [illegible]

③ [illegible]

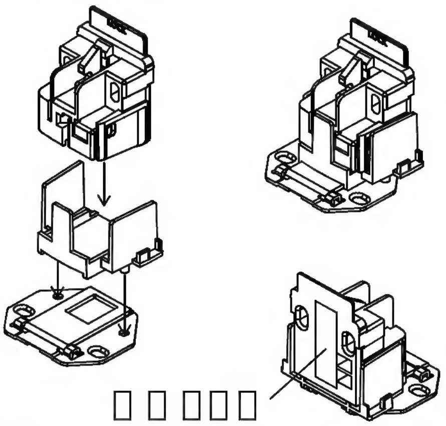

2 [illegible]

① [illegible]

② [illegible]

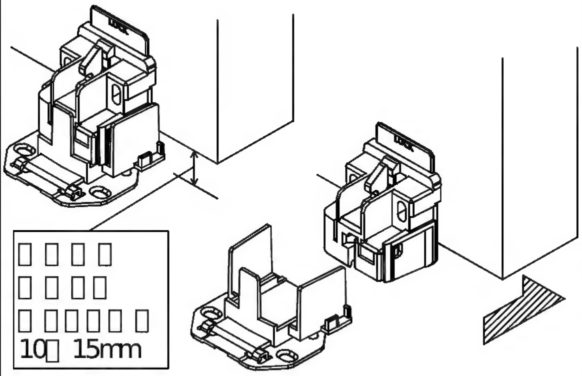

3 [illegible]

① [illegible]

② [illegible]

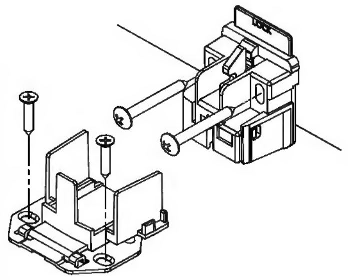

4 [illegible]

① [illegible]

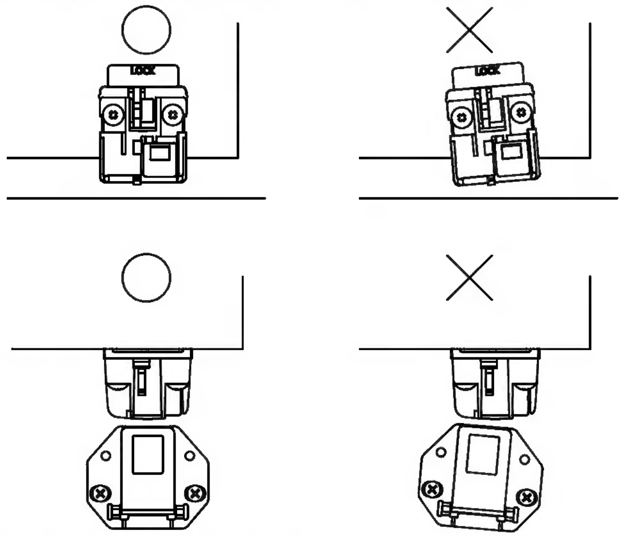

② [illegible]

③ [illegible]

5 [illegible]

① [illegible]

② [illegible]

③ [illegible]

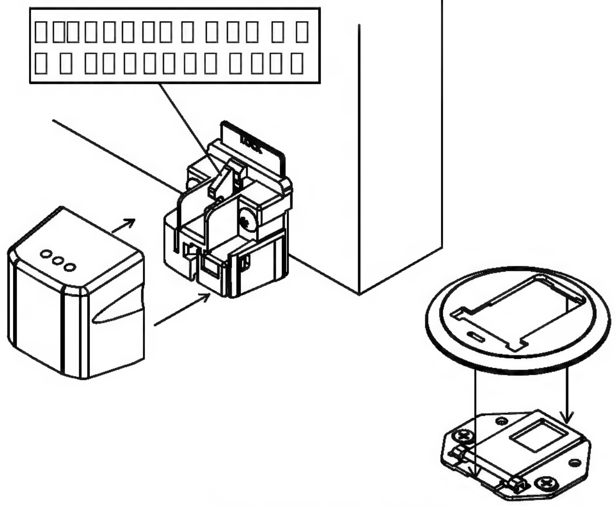

[illegible]

■ [illegible]

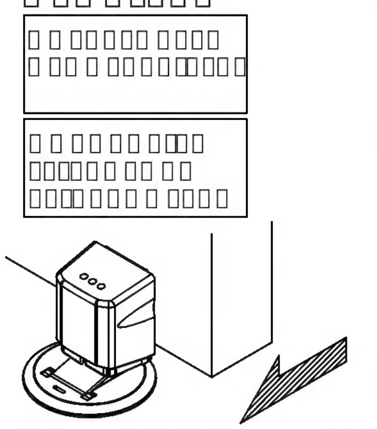

※ [illegible]

■ [illegible]

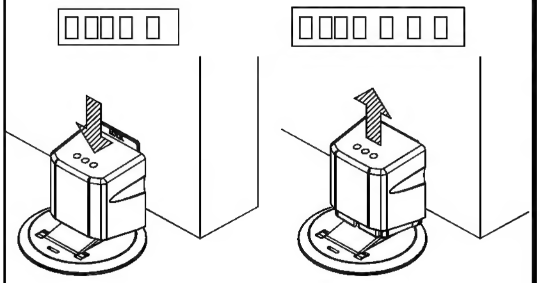

※ [illegible]

※ [illegible]

※ [illegible]

[illegible]

■ [illegible]

① [illegible]

② [illegible]
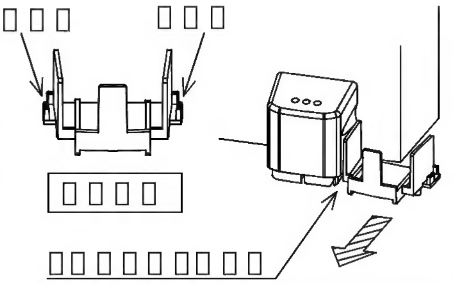
③ [illegible]